DLD1500-L120-DA (Model 1500DA-L)

MAIN FEATURES

- Nominal input voltage: 120/220 – 240/277 V_{AC}
- Non-isolated, Class I
- 3 independent output channels
- Max output power 500 W (per output channel)
- Output current range 350 – 1200 mA (per output channel), DALI 2 programmable
- Output voltage range 260 – 520 V_{DC} (per output channel)
- IEEE 1789 Flicker Recommended Practice Compliant
- Max remote distance 200 meters
- DALI 2 control up to 33 fps
- Hot restrike (below 1 s from 0 to 100%)
- Surge level 10 kV for both common mode and differential mode
- Certification CE and ENEC; suitable for emergency lighting (EL), with AC supply only, in centralized control systems. Full design conformity to UL, Chinese, Australian and New Zeeland safety standards
- Adaptable thermal protection for LED Modules
- Lifetime: >95.000 hours at maximum load
- Short circuit, overpower, over voltage protections
- DALI 2 configurable single-channel (1 x DT6) or multi-channel (up to 3 x DT6) operating mode
- Autonomous "Middle-Of-The-Night" dimming ("Adjustable Dimming")
- Constant Lumen function
- PMD implementation according to DiiA Part 251 and Part 253 specifications
- Remote firmware update
- IP66 enclosure

DESCRIPTION

This datasheet details the electrical, mechanical and environmental specifications of a Class I non-insulated, 1500 W, 3 (three) output constant current channels DALI 2 programmable. An IP66 enclosure makes it also suitable for outdoor applications and its electrical characteristics make it suitable for TV broadcasting applications.
The DLD1500-L120-DA LED driver is ENEC certified according the IEC/EN 61347-2, IEC/EN 61347-1 and IEC/EN 62384.

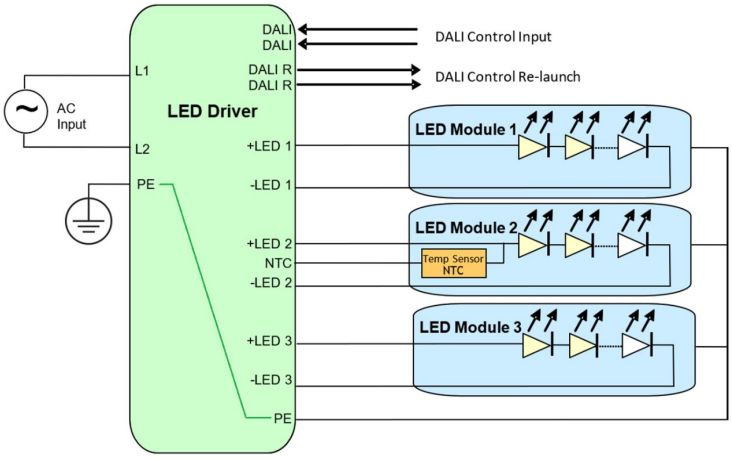

MODEL CODING AND OUTPUT RATINGS

Model Ordering Code	Dimming	Output Channels	Pout Max [W]	V_{OUT} Min [V_{DC}]	V_{OUT} Max [V_{DC}]	I_{OUT} Programmable Settings [mA]				
DLD1500-L120-DA (Eng Code: RHPS541A-A)	**DALI 2.0**	**3**	**1500**	**260**	**520**	350	500	850	1050	**1200 (*)**

(*) 1200 mA is the factory default setting output current

OUTPUT MAXIMUM ABSOLUTE RATINGS

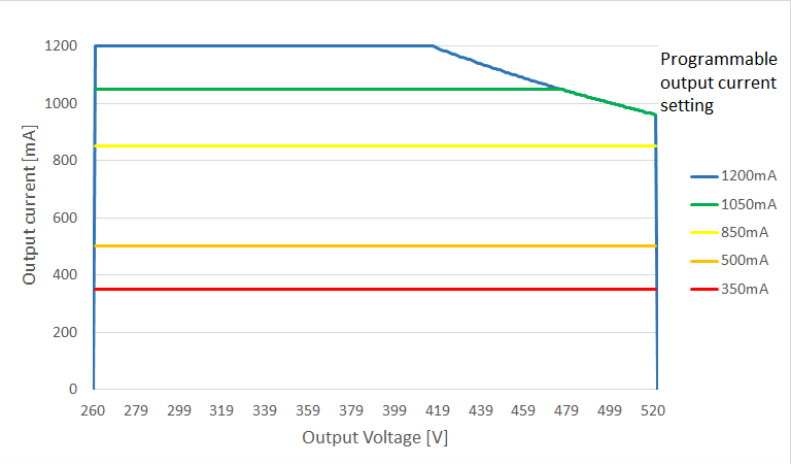

INPUT SPECIFICATION

Specification	Test Conditions / Notes		Min	Nom	Max	Units
AC Input Voltage	Device starts and operates at 110 V_{AC} at all load conditions		110	120/220 – 240/277	305	V_{AC}
Input Frequency			47	50/60	63	Hz
Efficiency at max load	120 V_{AC}	Load (1200 mA, 416 V)	-	93	-	%
	230 V_{AC}	Load (1200 mA, 416 V)	-	96.5	-	
	277 V_{AC}	Load (1200 mA, 416 V)	-	97	-	
Efficiency at minimum load	120 V_{AC}	Load (350 mA, 280 V)	-	94	-	%
	230 V_{AC}	Load (350 mA, 280 V)	-	93	-	
	277 V_{AC}	Load (350 mA, 280 V)	-	90.5	-	
Input Current	120 V_{AC}	Load (1200 mA, 416 V)	-	13	13.5	A
	230 V_{AC}	Load (1200 mA, 416 V)	-	6.5	6.8	
	277 V_{AC}	Load (1200 mA, 416 V)	-	5.5	5.8	
Power Factor	120 V_{AC}	Load (1200 mA, 416 V)	0.99	-	-	
	230 V_{AC}	Load (1200 mA, 416 V)	0.98	-	-	
	277 V_{AC}	Load (1200 mA, 416 V)	0.97	-	-	
THD	120 V_{AC}	Load (1200 mA, 416 V)	-	-	5	%
	230 V_{AC}	Load (1200 mA, 416 V)	-	-	11	
	277 V_{AC}	Load (1200 mA, 416 V)	-	-	12	
Inrush Current (peak)	120 V_{AC}	Half value time: 0.9 ms	-	-	35.8	A
	230 V_{AC}	Half value time: 0.85 ms	-	-	60.9	
	277 V_{AC}	Half value time: 1.65 ms	-	-	62.9	
Harmonic Current	Complies with EN 61000-3-2, Class C load >40%					
Hot Restrike	Hot restrike in less than 1 s preventing the triggering of a circuit breaker "C-Type 16A MCB" connected with 2 Driver					

Note: the specified load conditions reported in the "Test Conditions / Notes" column, are simultaneously applied to all output channels.

OUTPUT SPECIFICATIONS

Specification	Test Conditions / Notes	Min	Nom	Max	Units
Output Channels	3 independent output channels				
Total Output Power		-	-	1500	W
Output Power Rating	Per output channel	-	-	500	W
Output Voltage		260	-	520	V_{DC}
Output Current	Programmable via DALI in 5 steps: 350/500/850/1050/**1200 (default)**	350	-	1200	mA
Minimum dimming level		5	-	-	mA
Ripple Current_HF	High frequency (>15 kHz) $I_{HFPk-pk}/Iout_{AVG}$ at 1200 mA	-	-	20	%
Ripple Current_LF	Low frequency <1 kHz	-	-	2	%
Flicker	IEEE 1789 Flicker Recommended Practice Compliant from 100% to 0.4%				
Current Set Accuracy		-	±3	-	%Iout
Turn-on Time	Compliant with clause 9.13 of IEC 62386-102:2014	-	0.7	1	s
Max Remote distance	Max distance between the LED driver and each LED module connected with an appropriate cable section to ensure a total voltage drop < 5 V on each channel. The total Vf shall not exceed the max V_{OUT} rating			200	m

PROTECTION FEATURES

Specification	Test Conditions / Notes	Min	Nom	Max	Units
Output Over Voltage	The faulty channel shuts down and restarts approximatively every 5s	525	-	-	V
Output Under Voltage	The faulty channel shuts down and restarts approximatively every 5s	200	-	-	V
Output Short-Circuit	The faulty channel shuts down and restarts approximatively every 5s	-	-	-	-
Over Power	If in each channel the output power exceeds this threshold, its current will be reduced. Removing the fault conditions the normal operation is recovered.	510	-	-	W
Internal OTP vs T_{AMB}	The LED Driver checks the internal temperature every 60 seconds. If an OT condition is detected, the output current is gradually reduced at 35 steps every 60 s. In any condition the output current will not decrease below 20% of the set current	45			°C
No Load V_{OUT} Transient (peak)	The faulty channel shuts down and restarts approximatively every 5s			520	V
Isolation	Class I (with PE). LED output not isolated from mains				

INFORMATION ON ISOLATIONS

- The DALI control terminals in some installations are considered FELV control terminals.
  Since the DALI circuit have an internal reinforced insulation from live parts there is not any risk to touch the DALI terminals of the controlgear when it is connected to a controller with reinforced insulation, or when it is not connected. But in some installations the DALI control wiring is not provided with a reinforced insulation with respect to LV. For this reason the DALI terminals are marked with the warning of “Risk of electric shock” and this line is considered not safe to touch. This is to protect against the fault of the insulation of the external control circuit.

- NTC control circuit is not separated from Primary/LED outputs circuits.

- LED outputs circuits are not separated from Primary circuit.

- LED outputs circuits are not separated from each other LED outputs circuits.

INRUSH CURRENT DATA

Referring to the different kinds of circuit breakers available on the market, the maximum number of connectable to the LED driver is reported in the following table for each nominal input voltage.

V_{IN}	Inrush Current Data		# Drivers For Each Circuit Breaker											
Nominal [V_{AC}]	I peak [A]	Half Value Time [µs]	Type B 10A	Type B 16A	Type B 20A	Type B 25A	Type C 10A	Type C 16A	Type C 20A	Type C 25A	Type D 10A	Type D 16A	Type D 20A	Type D 25A
120	36	900	0	1	1	1	0	1	1	1	0	1	1	1
230	61	850	1	1	2	3	1	1	2	3	1	1	2	3
277	63	1650	0	1	1	1	1	1	2	3	1	2	2	3

OUTPUT CONTROLS

DALI 2 Dimming Control:
The driver provides a DALI 2 interface "standards IEC 62386-101:2014, IEC 62386-102:2014 and IEC 62386-207:2009 (LED modules, device type 6)"
The 3 output channels will have the same current setting.
Dimming range: 0.4 ÷ 100% of the set current (lower bound limited by the minimum physical current 5 mA)
Dimming Type: Constant Amplitude dimming from 100% to 150 mA, PWM dimming from 150 mA to 0.4% at 2 kHz.

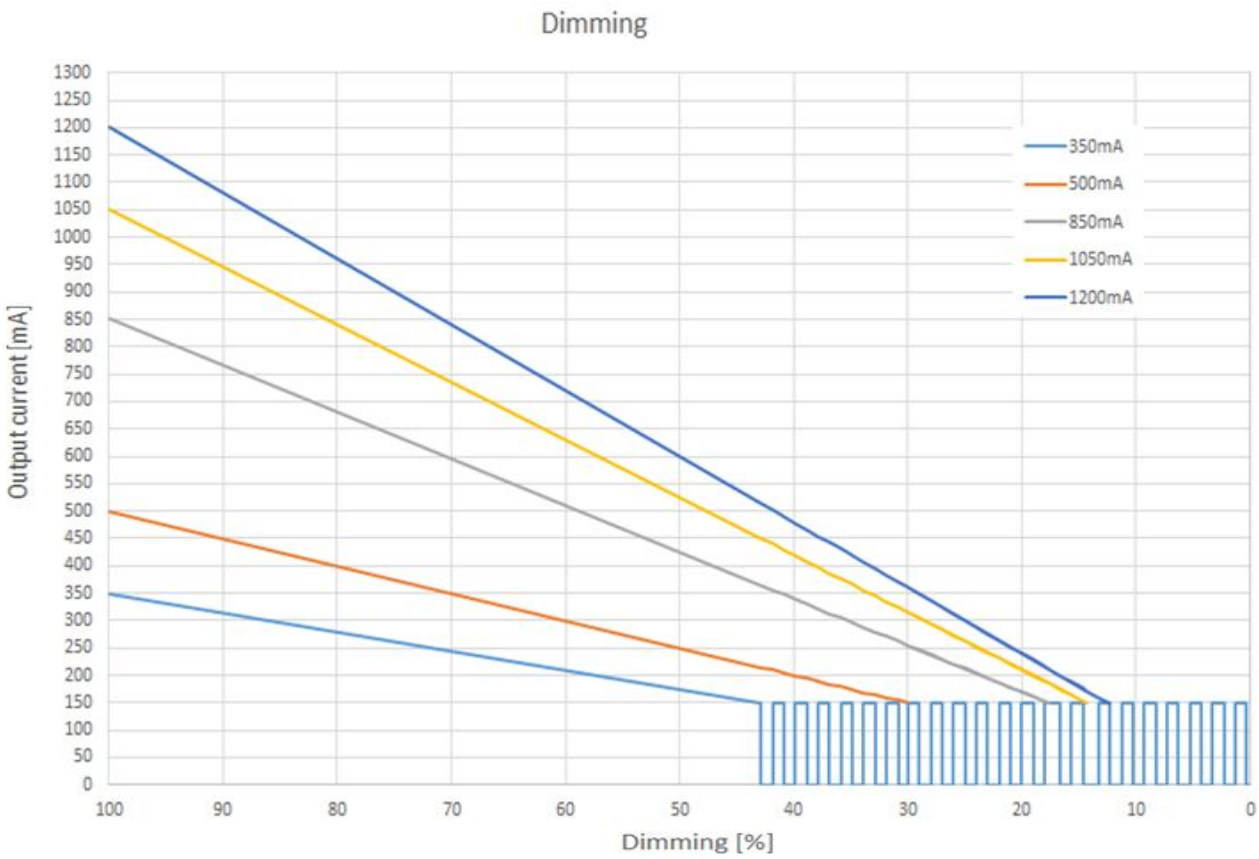

OUTPUT CURRENT SETTINGS (DALI 2)

The output current index set by the factory is stored at address 0x03 of DALI memory bank2. This location can be read and written as stated by the IEC62386-102:2014.

Engineering Code	Ordering Code	Output Current	Index
		350	0
		500	1
		850	2
		1050	3
RHPS541A-A	DLD1500-L120-DA	**1200 (*)**	4

(*) factory default

NTC DIMMING

The External LED module temperature can be read and controlled connecting the following circuit using an NTC thermistor to the LED driver.

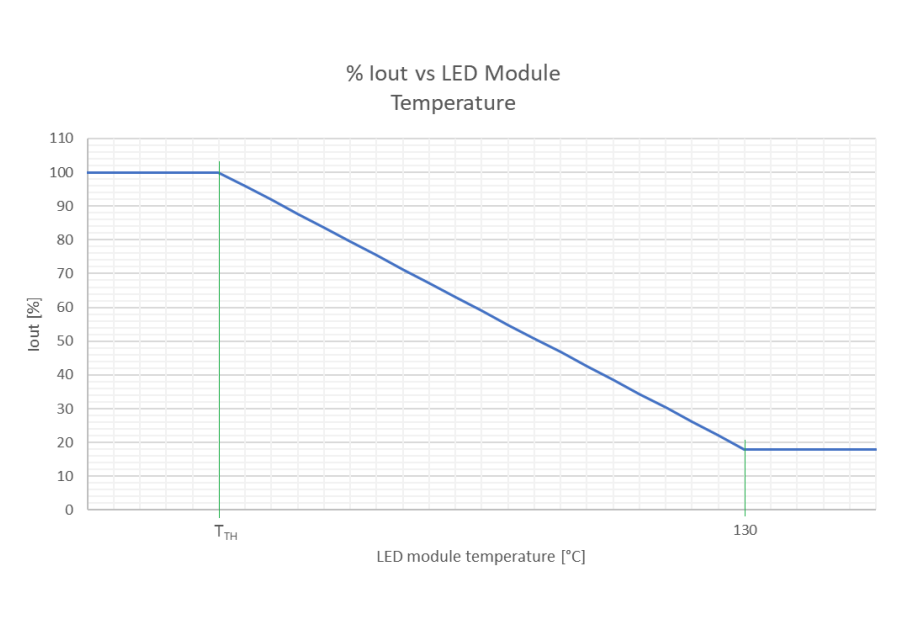

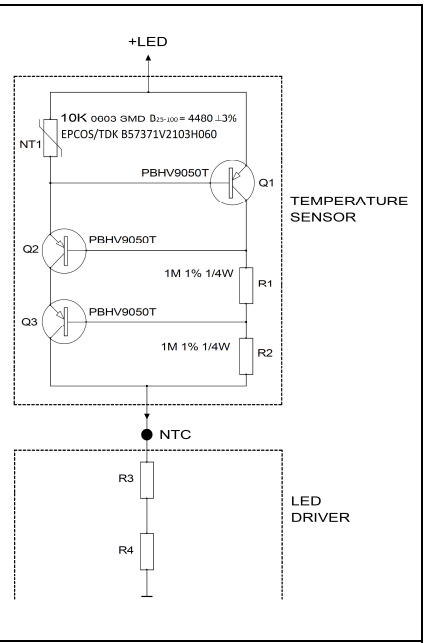

The thermal measurement is performed connecting NTC circuit from the pin LED+ and the NTC pin.
The NTC circuit has to be placed on the LED assembly to monitor its temperature. When the temperature exceeds a predetermined threshold value (T_{TH}), the output current provided to the module will automatically and gradually decrease to bring the temperature of the LED assembly back to safe value.
The NTC signal does access and is read by one single channel, which however replicates the same thermal protection dimming value identified to the other LED output channels.
The driver has been factory set considering a 110°C NTC. It can be used others NTC ratings (90 ÷ 110°C) upon LED driver setting (see User Manual for instruction).

NOTE: The temperature measurement accuracy depends on the load condition.

MECHANICAL DETAILS

Packaging:	Die cast EN AC-43400 or EN AC-44300 Aluminium alloy
Finishing:	Powder coating, colour grey anthracite RAL 7016
I/O Connections:	Push-in connectors
	Input Connections: L1, L2, PE
	Control Connections: DA, DA double connection for DALI line for re-launch
	Output connections (LED+, LED-) x 3 channels + PE lum + NTC
Signal LED	Shows the LED driver state
Ingress Protection:	IP66
IK Code:	IK08
Dimensions:	500 x 150 x 120 mm (19.68 x 5.90 x 4.72 in)
Mass:	6.10 kg (13.45 lbs)

OUTLINE DRAWINGS

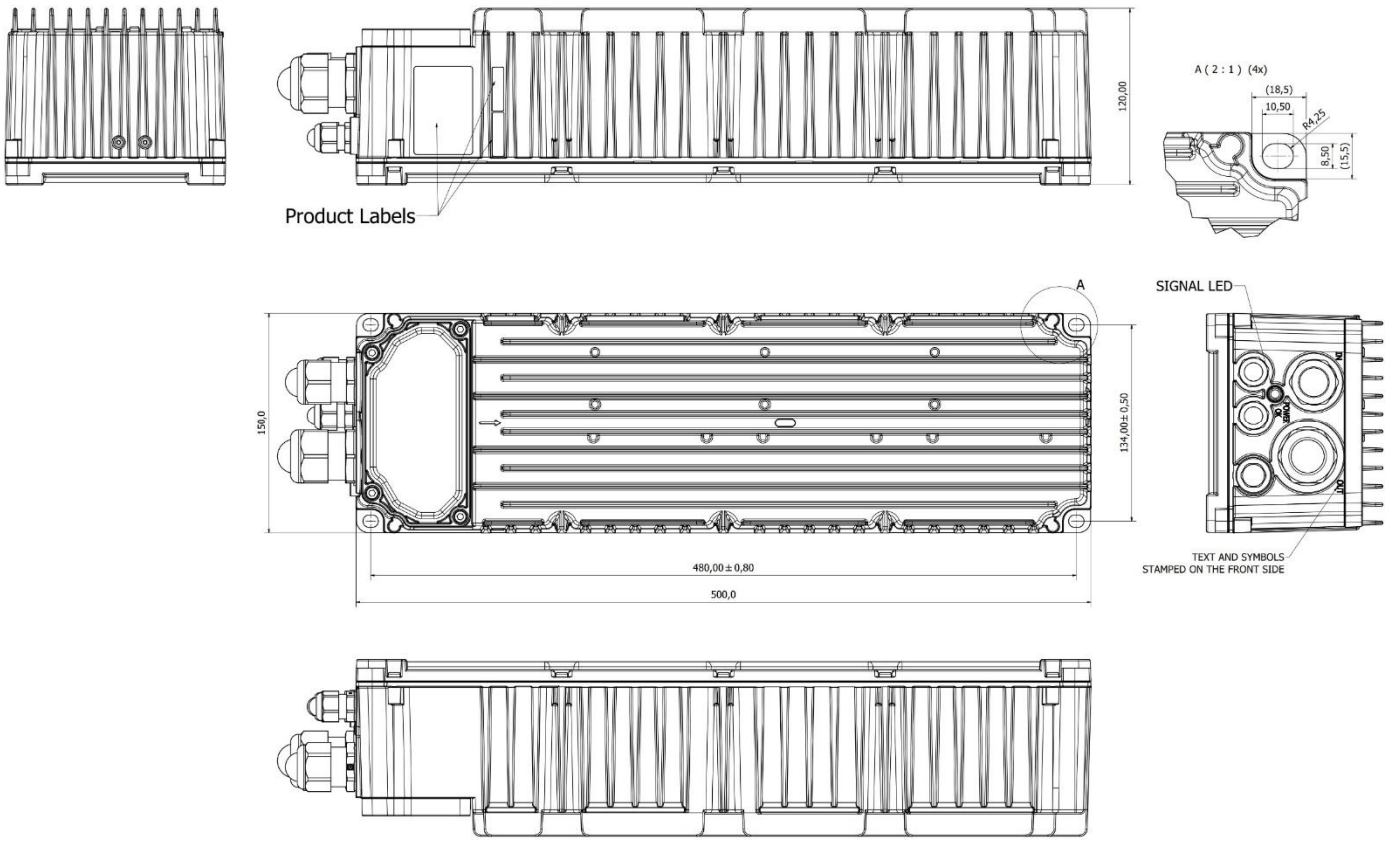

ELECTRICAL CONNECTION

All connections to and from the DLD1500 LED driver are made by means of mini feed-through terminal block.

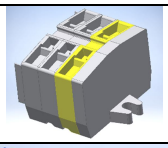

Mains Section (AC Side)
Three input terminal blocks, for AC input L1, L2 and PE connections (M25 Cable Gland).
Total number of mains connection is composed of 3 positions.

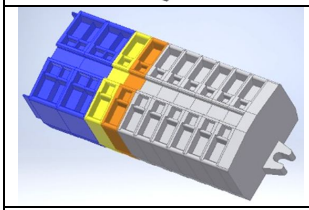

Control Section (DALI/DALI Re-launch)
DALI_in, DALI_in, (M16 Cable Gland); DALI_rel, DALI_rel (M16 Cable Gland).
Total number of Control connections is composed of 4 positions.

Output connection:
PE Lum, NTC, LED1+, LED1-, LED2+, LED2-, LED3+, LED3- (M32 Cable Gland)
Total number of Output connections is composed of 8 positions.

Connection method:
Spring-cage connection, number of connections: 15, cross section: 0.8 - 4 mm², AWG: 18–12.
(1.5-4 mm², AWG: 15-12 for AC input, PE and +/- LEDs)
Mounting type: Direct mounting with flange

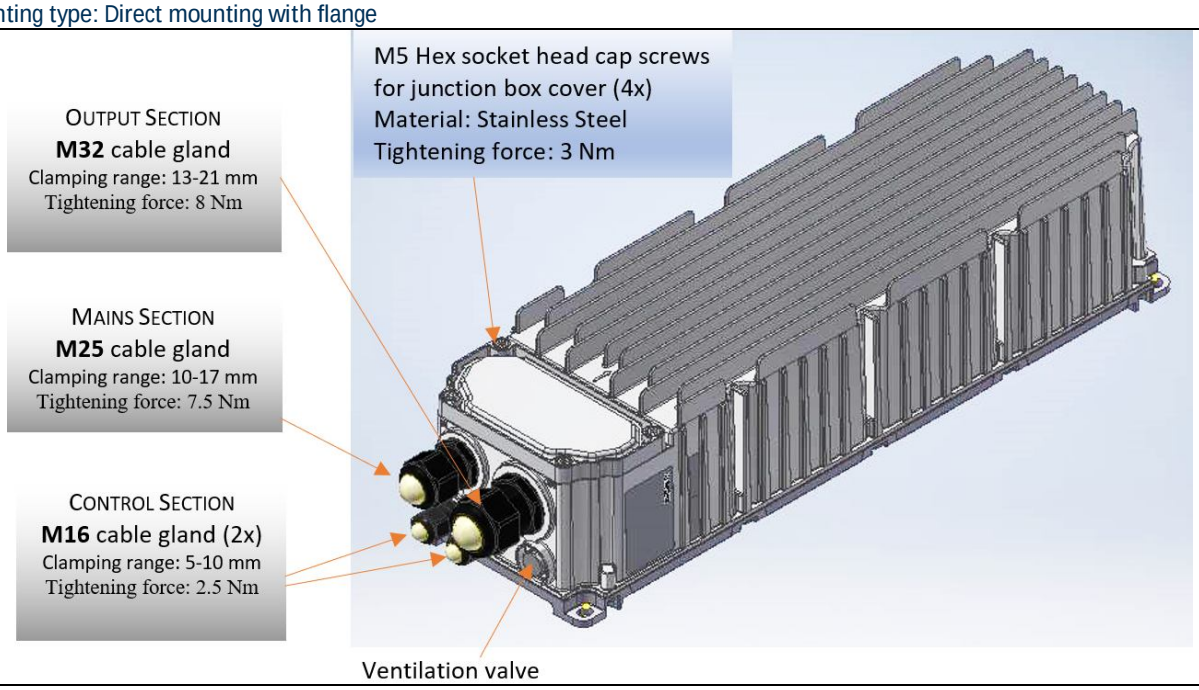

Connection	Torque [Nm]	Ø Min [mm]	Ø Max [mm]	Connector AWG	Section (*) [mm²]
Mains Cable M25	7.5	10	17	15-12	1.5 – 2.5
DALI Cable M16	2.5	5	10	18-12	0.8 – 2.5
Output Cable M32	8	13	21	15-12	1.5 – 2.5

Front View

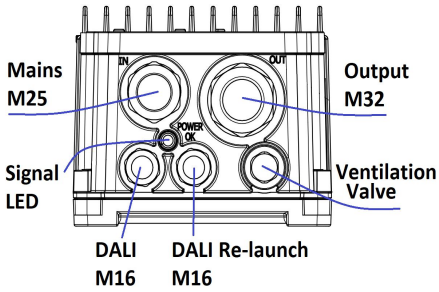

(*) up to 2.5 mm² for stranded conductor, up to 4 mm² for rigid conductor

WIRING CONNECTION

PINOUT		
NUMBER	LABEL	DESCRIPTION
1	L1	AC LINE 1 INPUT
2	L2	AC LINE 2 INPUT
3	⏚	PROTECTIVE EARTH
4	DA	DALI INPUT
5	DA	DALI-RELAUNCH
6	DA	DALI INPUT
7	DA	DALI-RELAUNCH
8	⏚	PROTECTIVE EARTH FOR LED MODULE
9	NTC	THERMAL MEASURE INPUT
10	+1	LED1+ CONNECTION
11	-1	LED1- CONNECTION
12	+2	LED2+ CONNECTION
13	-2	LED2- CONNECTION
14	+3	LED3+ CONNECTION
15	-3	LED3- CONNECTION

SIGNALLING LED INDICATIONS

Period	Pulses	Fault description	Priority [3]
The encoded faults are based on pulses emitted every 4 seconds	1	One or more active CCR[1] module is not working	MAXIMUM
	5	Firmware version of one or more CCR[1] module is not compatible with main control board firmware	
	2	One or more active[2] output is short-circuited	
	3	One or more active[2] output is disconnected from load	
	4	Thermal derating active (output current reduction)	MINIMUM

[1] CCR module stands for Constant Current Regulator module (is the hardware device that controls output current for a single output)

[2] "active" means enabled by product configuration

[3] if more than one error is present at the same time, only the one with higher priority will be shown by the signalling LED

INSTALLATION NOTICE

T_C Reference at Max Ambient Temperature		
HORIZONTAL		VERTICAL
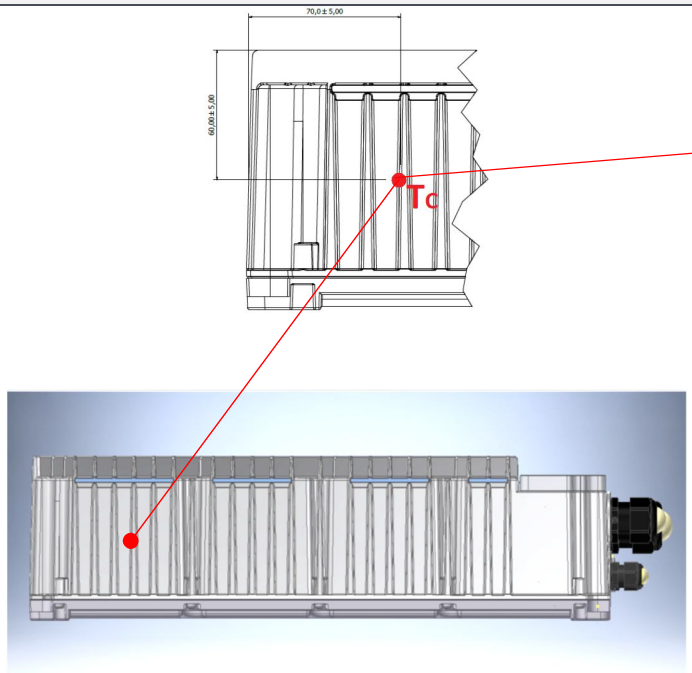		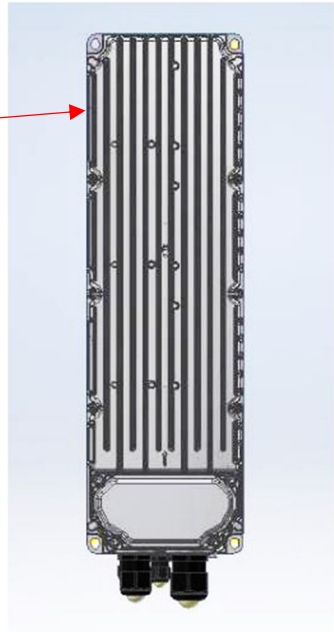
120 Vac	70	65
230 Vac	60	60
277 Vac	55	55
Max Ambient Temperature	45 °C	45 °C

ENVIRONMENTAL SPECIFICATIONS

Specification	Test Conditions / Notes	Min	Nom	Max	Units
Top Case Temperature Range	Top case temperature without derating, please see Installation notice.	-40	-	70	°C
Ambient Temperature Range		-40	-	45	°C
Storage Temperature	Relative Humidity 95% non-condensing	-40	-	85	°C
Cooling	Convection cooled				
Shock EN 60068-2-27	Operating: Half sine 30 g/18 ms, 3 axes, 6x each (3 positive and 3 negative) Non-Operating: Half sine, 50 g/11 ms, 3 axes, 6x each (3 positive and 3 negative)				
Vibration EN 60068-2-64	Operating: 5-500 Hz, $1g_{RMS}$ (0.02 g^2/Hz), 3 axes, 30 min, random Non-Operating: 5-500 Hz, 2.46 g_{RMS} (0.0122 g^2/Hz), 3 axes, 30 min, random				
Vibration EN 60068-2-6	Operating Sine, 10-500 Hz, 1 g, 3 axes, sweep 1 Oct/min., 60 min, 1 g - survival				
MTBF	Telcordia SR-332 Issue 2 (40 °C ambient, max load, duty 50%)	-	500.000	-	hours
Useful Life	At max load, 45 °C ambient, any nominal input voltage	95.000	-	-	hours

ELECTROMAGNETIC COMPATIBILITY (EMC) – EMISSIONS

Phenomenon	Conditions / Notes	Standard	Performance Class
Conducted Emission	Test at 230 V_{AC}	EN55015	
Radiated Emission	Test at 230 V_{AC}	EN55015	
Conducted Emission	Test at 120/277 V_{AC}	EN55032	Class B
Conducted and Radiated Emission	Test at 120/277 V_{AC}	FCC CFR47- part 15/subpart B	Class B
Harmonic Current Emissions		EN61000-3-2	Class C (Load>40%)
Voltage Changes, Fluctuation and Flicker		EN61000-3-3	

ELECTROMAGNETIC COMPATIBILITY (EMC) – IMMUNITY

Phenomenon	Conditions / Notes	Standard	Note
Equipment for general lighting purposes -EMC Immunity Req.		EN 61547	
ESD (Electrostatic Discharge)		EN 61000-4-2	
Radiated Radio-Frequency electromagnetic field		EN 61000-4-3	
Electric Fast Transient / Burst		EN 61000-4-4	
Surge	Level ±**10** kV L-L; ±**10** kV L/L-PE	EN 61000-4-5	
Conducted disturbances induced by Radio-Frequency fields		EN 61000-4-6	
Voltage Dips, short interruptions and Voltage Variations		EN 61000-4-11	
Non-repetitive damped oscillatory transient, Ring wave	2.5 kV	ANSI C.62.41	Category A

SAFETY AGENCIES APPROVALS

	IEC/EN 61347-2-13 electronic control gear for LED Module and IEC/EN 61347-1 IEC/EN 62384 DC or AC supplied electronic control gear for LED modules – Performance Requirements	**MARK**
CE	CE Declaration of Conformity	**MARK**
CB	CB report	**REPORT**
EL	The controlgear is tested according to Annex J of IEC/EN 61347-2-13. It is intended for use in AC supply mode for the connection to a centralized emergency supply. The product does not contain any battery. Do not connect it to a DC supply. The rated emergency supply voltage is 220-240 V. The centralized supply system must be able to supply this voltage in order that the controlgear be made available the outputs to the LED loads. The Emergency Output Factor is EOFx = 1, at the specified ambient temperature, for which the output current does not differ from the set current more than -/+ 15%.	**MARK**

The DLD1500 is be compliant with UL, Chinese, Australian and New Zeeland safety standards, not certified, the mark will be eventually applied by the customer

Chinese standard	The products meet the requirements of China implementation rules CNCA-C09-01:2014 and the corresponding standards GB4943.1-20111; GB17625.1-2012; GB9254-2008 (Class A)
Australian and New Zeeland standards	The product has been tested and fulfils the requirement of the differences in the safety standards AS/NZS 61347.1:2016 and of AS 61347.2.13:2018
UL	UL Compliant ANSI / UL8750, CSA C22.2 No.250. LED Driver suitable for dry and damp location

Specifications appearing in ENEDO's catalogues and brochures as well as any oral statements are not binding. All descriptions, drawings and other particulars (including dimensions, materials and performance data) given by ENEDO are as accurate as possible but, being given for general information, and are not binding on ENEDO. ENEDO makes thus no representation or warranty as to the accuracy of such material. We assume no liability other than as agreed in the terms of the individual contracts and we reserve the right to make technical modifications in the course of our product development. Our product information solely describes our goods and services and is in no way to be construed or interpreted as a quality or condition guarantee. The aforesaid shall not relieve the customer of its obligation to verify the suitability of our Products for the use or application intended by the purchaser. Customers are responsible for their products and applications. ENEDO assumes no liability from the use of its products outside of specifications. No license is granted to any intellectual property rights by this document.